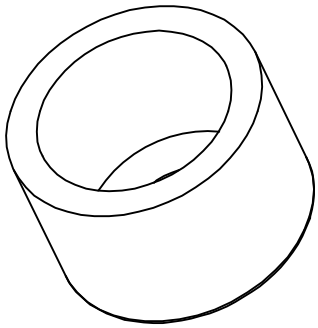

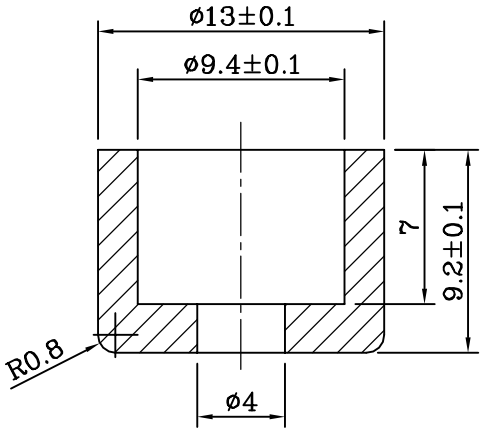

SECTION:A−A

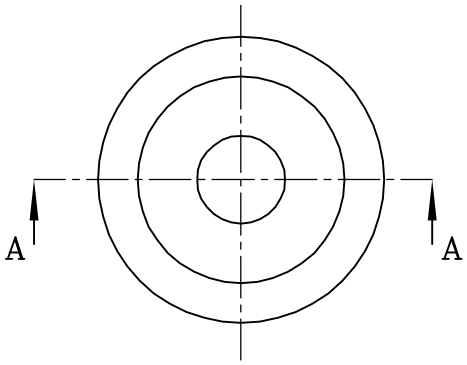

NOTES:

1、Material used is Silicon Rubber,70Degree,color is black;
2、External viewing should have no defects, pin-whole should be less than 0.03 mm.;
3、The Tolerance of those parameters do not specify are coincided with IT11 Grade。

Drawing No	Mark	Doc No.	Signature	Date	Holder Rubber	Material: silicon rubber
	design		date			Part No: 01.AE.MT.976509
Version	check		date		Proportion 10:1	HORN
1.2	approve		date		Page 1 of 1	Shenzhen Horn Electroacoustic Technology Co.,Ltd

PDF created with FinePrint pdfFactory trial version www.pdffactory.com